PC4 Series
Combinations 3/8″ and 1/2″

Symbol

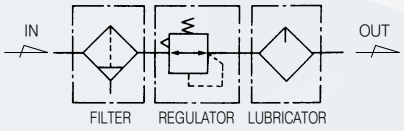

▣ Standard Specifications

Fluid		Air
Max. operating pressure (MPa)		1.0(140psi)
Proof pressure (MPa)		1.5(200psi)
Set pressure range (MPa)	Standard	0.05 ~ 1.0(7~140psi)
	Made to order specifications	0.05 ~ 0.2(7~30psi) 0.05 ~ 0.4(7~60psi) 0.05 ~ 1.5(7~200psi)
Ambient and fluid temperature (℃)		−5~60(23~140°F) (Non−freezing)
Flow capacity ※ (Nℓ/min)	3/8″	2,800(99scfm)
	1/2″	4,300(152scfm)
Filtration (㎛)		5
Construction		Relieving style
Recommended oil		ISO VG32 (Turbine oil 1 class)
Port size for pressure gauge (Rc (PT), NPT)		1/8″
Weight (kg)		1.88(4.14lb)

※ Test conditions : Supply pressure 0.7 MPa(100psi), Set pressure 0.6 MPa(90psi)

▣ How to order

PC 4 A — ＊ 04 D G — ＊ — C3M3Z

Series (Combination Units)

Components

Blank	Filter−Regulator−Lubricator
A	Piggyback−Lubricator
B	Filter−Regulator
C	Filter−Coalescing Filter(0.3)−Regulator
D	Piggyback−Coalescing Filter(0.3)
E	Filter−Coalescing Filter(0.01)−Regulator
F	Piggyback−Coalescing Filter(0.01)

Thread

Blank	Rc(PT)
N	NPT
G	G(PF)

Port size

03	3/8
04	1/2

Drain Options

Blank	Manual Push Drain
D	Auto Drain (N.O Type)

Note1)

Note1) Min.operating pressure is 0.15MPa (20psi) for Auto Drain (N.O Type)

Pressure Gauge

Symbol	Description	Pressure range
Blank	None	
G	Integral pressure gauge (W/Limit Indicator)	1.0MPa(140psi)
P	Pressure gauge	1.0MPa(140psi)
P2	Pressure gauge	0.2MPa(30psi)
P4	Pressure gauge	0.4MPa(60psi)

Other Options

Blank	Set at 0 to 1.0 MPa(140psi), 5㎛ (Standard)			
2	Set at 0 to 0.2 MPa(30psi)	K	Built−in Check Valve	Note2)
4	Set at 0 to 0.4 MPa(60psi)	L	Life Indicator	
15	Set at 0 to 1.5 MPa(200psi)	R	Flow direction : Right → Left	Note2,3)
E	Non−relieving type	T	Tamper Resistant Kit	
J2	Filter element − 20㎛	U	Regulator (Top mounted)	
J4	Filter element − 40㎛	XC16	Copper−free	

Note2) Refer to page 85 for Built−in Check valve, Tamper resistant kit.
Note3) Separately packed, Not assembled.
＊If ordering more than one option, indicate symbols numerically then alphabetically Ex) 2EK
＊Over Max. pressure value can be set.

Accessories

Symbol	Port size	Description	Applicable series
C1	1/8"	Check Valve	PC2~PC3
C2	1/4"		PC2~PC4
C3	3/8"		PC4
M1	1/8"	Modular Manifold Block Kit	PC2~PC3
M2	1/4"		PC2~PC4
M3	3/8"		PC4
S	−	Slow Start Valve	PC4
V	−	Lock−out Valve	PC2~PC5
W	−	Modular pipe adapter Kit	PC2~PC5
Z	−	Pressure Switch	PC2~PC5

＊Refer to page 62 for how to attach bracket & how to combine the accessories
＊When specifying more than one symbol, indicate them alphabetically Ex) C3M3Z

▣ Construction

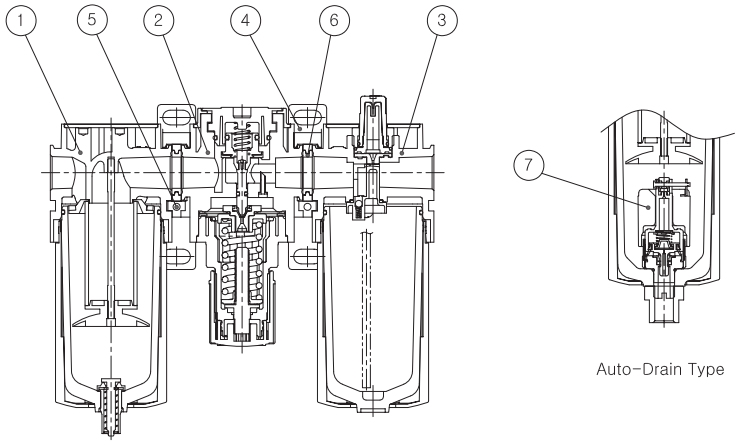

Auto-Drain Type

Main Parts / Parts List

No.	Description	Material	Remarks
①	Filter ass'y	–	
②	Regulator ass'y	–	
③	Lubricator ass'y	–	
④	Bracket ass'y	Aluminum	
⑤	Connecting screw	Carbon steel	

Replacement Parts / Parts List

No.	Description	Material	Part No.
⑥	Spacer O-ring	NBR	PC4A-04-001-01
⑦	Auto-drain ass'y	–	TAF3000-04A-6008

▣ PC4 Dimensions

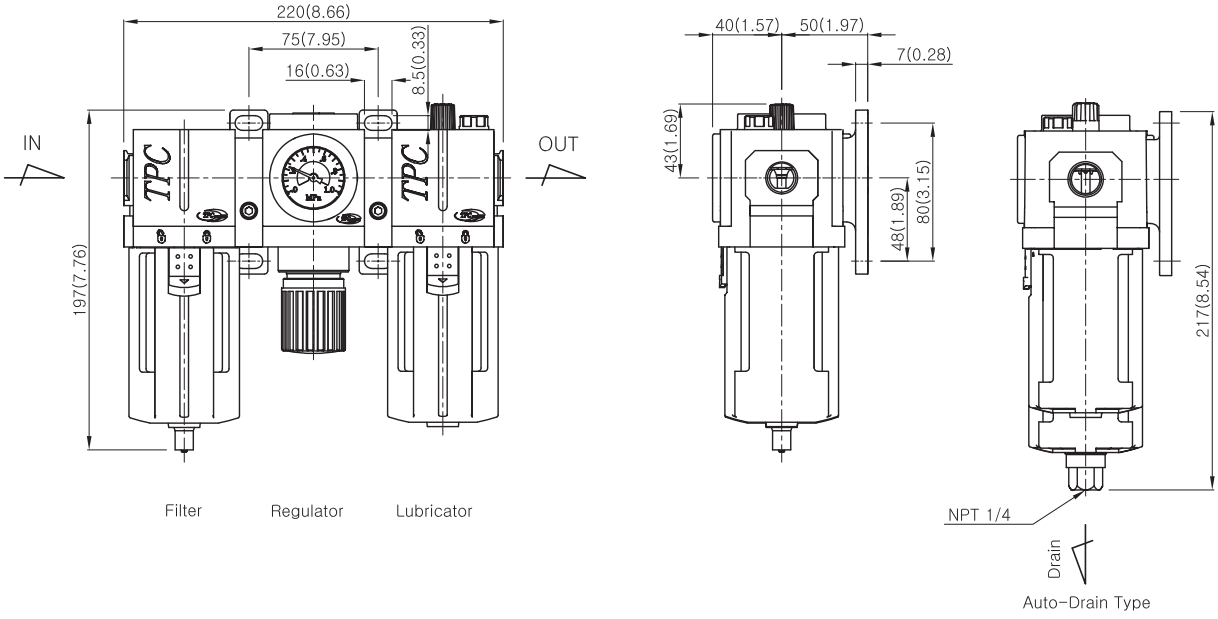

PC4 Series
Combinations 3/8″ and 1/2″

▣ PC4A Dimensions

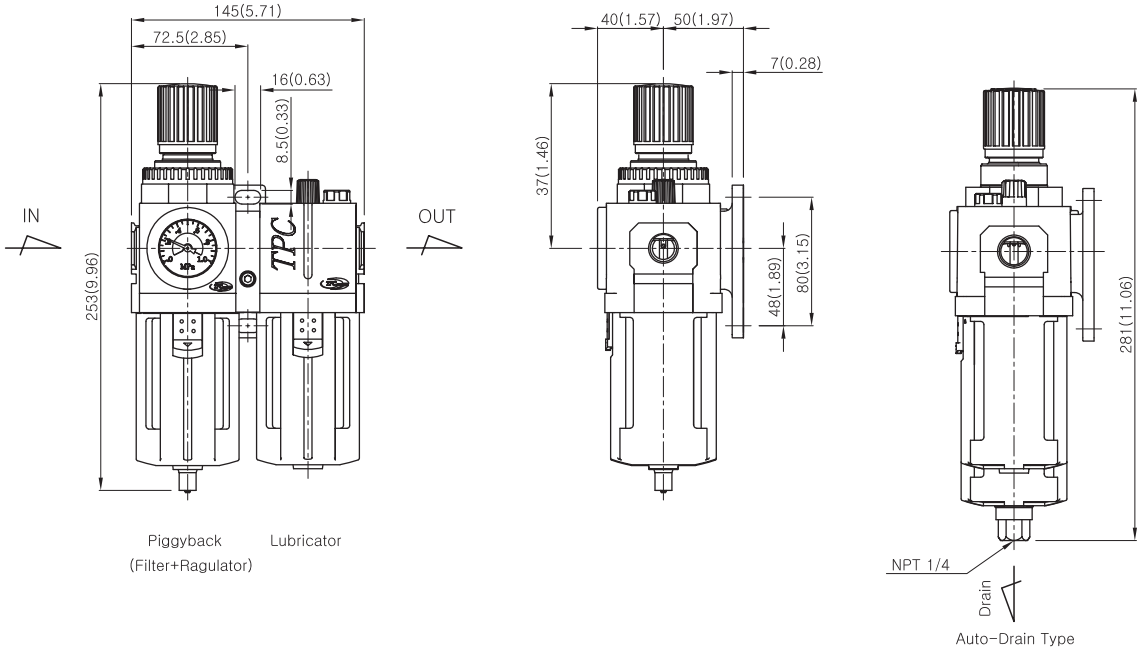

▣ PC4B Dimensions

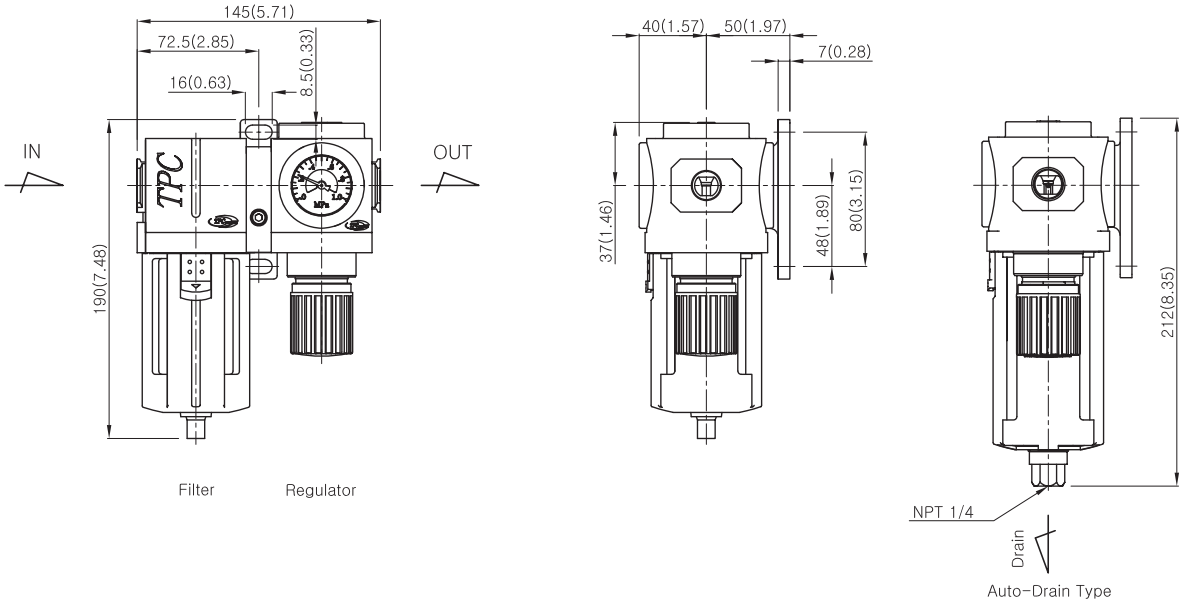

▣ PC4 Series Flow Characteristics

▶ 3/8″ PC4

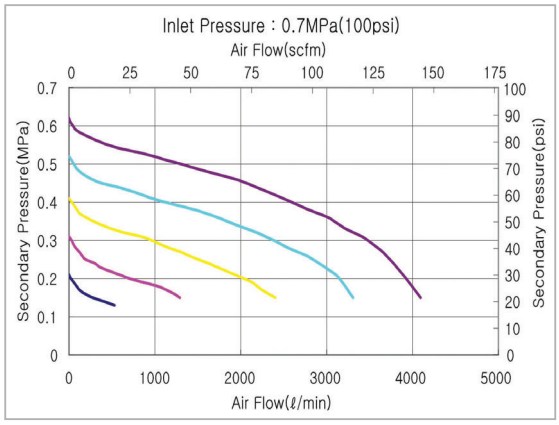

▶ 1/2″ PC4

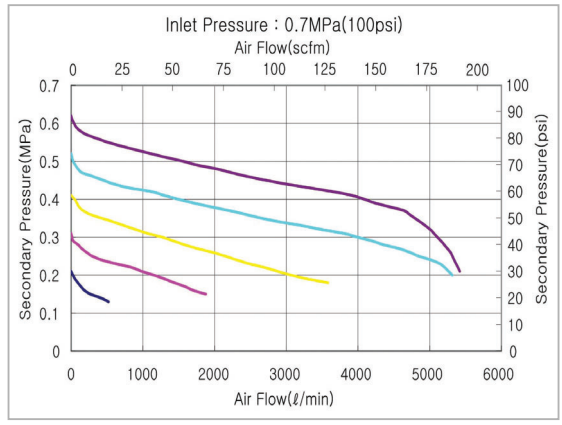

▶ 3/8″ PC4A

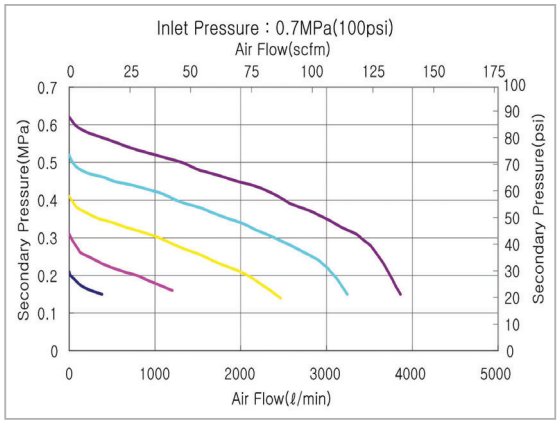
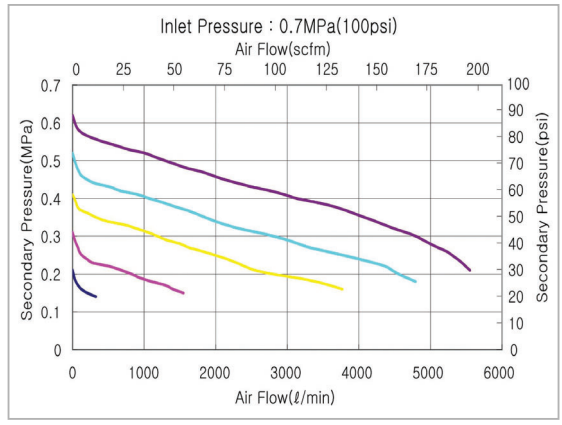
▶ 1/2″ PC4A